Introduction to Computer Systems

Department of Computer Science and Information Systems

Lecturer: Steve Maybank
sjmaybank@dcs.bbk.ac.uk
Spring 2020

Week 8b: Algorithm Design

Bottom Up Strategy

- Solve many small parts of the problem and gradually accumulate the information needed to solve the entire problem

- Examples:

  evaluation of expressions

  searching an unsorted list

Example: Evaluation of a Boolean expression

- Suppose that A, B, C are Boolean variables such that A=0, B=1, C=0. Evaluate the Boolean expression

(A AND B AND C) OR (A AND NOT(B))

Example: Searching an Unsorted List

```
parameters: list L and element a
printed output: True if a is in L otherwise False
function search (L, a)
    if (Length(L) == 0)
            print(False)
    else
            e = L[0]
            while ((e != a) and (e != last entry of L))
                    e = next entry of L
            endWhile
            print(e == a)
     endIf
endFunction
```

Top Down Strategy

- Divide the problem into two or more simpler problems
- Solve the simpler problems and then combine the answers
- Examples: quicksort, binary search of a sorted list

Binary Search of a Sorted List

```
parameters: sorted list L, element a
printed output: True if a is in L, otherwise False
function searchSortedList(L, a)
    if (Length(L) == 0)
        print(False)
    else
        print(searchNonEmptySortedList(L, a))
    endIf
endFunction
```

Search Non-empty Sorted List

```
parameters: sorted non-empty list L, element a
printed output: True if a is in L, otherwise False
function searchNonEmptySortedList(L, a)
    i1 = 0; i2 = Length(L)-1
    while (i2 > i1+1)
        j = largest integer ≤ (i1+i2)/2
        if (L[j] == a)
            print(True); return
        endIf
        if (a < L[j])
            i2 = j
        else
            i1 = j
        endIf
    endWhile
    print (a == L[i1] or a == L[i2])
endFunction
```

Compare Brookshear, Section 5.5

Example of Binary Search

- L = {1, 2, 5, 7, 9, 11, 26, 31}
- a = 26
- i1 = 0; i2 = Length[L]-1 = 7
- i2 > i1+1 thus enter while loop
- j = 3
- L[3] != a and not a < L[3], thus i1 = 3
- If a is in L then it is in the segment

  {7, 9, 11, 26, 31}

Other Strategies

- Find out if somebody else has solved the problem
- Solve a simpler but related problem
- Iteration: repetition of a standard calculation
- Enumeration
- Find a data structure for the problem suited to a computer

Solve a Simpler but Related Problem

Print out all palindromes
in the range 100 to 999

Print out all integers
in the range 100 to
999

Test to see if an integer
in the range 100 to 999
is a palindrome

Palindromes: 161, 222, etc

Example of Iteration

- Task: estimate the square root of 2
- Method: find a number x near to $\sqrt{2}$ and make a small change to bring it nearer to $\sqrt{2}$
- $(x+\delta)^2 = x^2 + 2x\delta + \delta^2 = 2$
- If δ is small then

$$x^2 + 2x\delta \approx 2$$

thus

$$\delta \approx (2 - x^2)/(2x)$$

Iteration

```
function sqrt2()
   x = 1
   while ((x*x  > 2.001) or (x*x  < 1.999 ))
         x = (1/x)+(x/2)  # x=x+δ
   endWhile
   return x
endFunction
```

This strategy (update an estimate to get a
better estimate) is very widely used in science

Enumeration

- List all the possible states of the problem and search for the solution
- Advantages: thorough, simple, good for small cases
- Disadvantage: very long run times if there are large numbers of cases

Example 1

- Person A has the task of determining the ages of person B's three children. B tells A that the product of the children's ages is 36. A replies that another clue is required, so B tells A the sum of the children's ages. Again, A replies that another clue is needed, so B tells A that the oldest child plays the piano. Then A tells B the ages of the children. How old are the children?

Solution by Enumeration

- Possible triples:

  (1,1,36), (1,2,18), (1,3,12), (1,4,9),
  (1,6,6), (2,2,9), (2,3,6), (3,3,4)

- Sums of triples:

  38, 21, 16, 14, 13, 13, 11, 10

- What next?

Ferry Problem

- A man wishes to ferry a wolf, a sheep and a bale of hay across a river. His boat will only hold one item at a time. The wolf cannot be left with the sheep and the sheep cannot be left with the hay. How can he ferry the three items?

Data Structure

- State: WSHb
- Red: start side of river
- *Blue and underlined italic* : other side of river
- Example: WSH*b*
- There are 16 states of which 10 are allowed

Solution

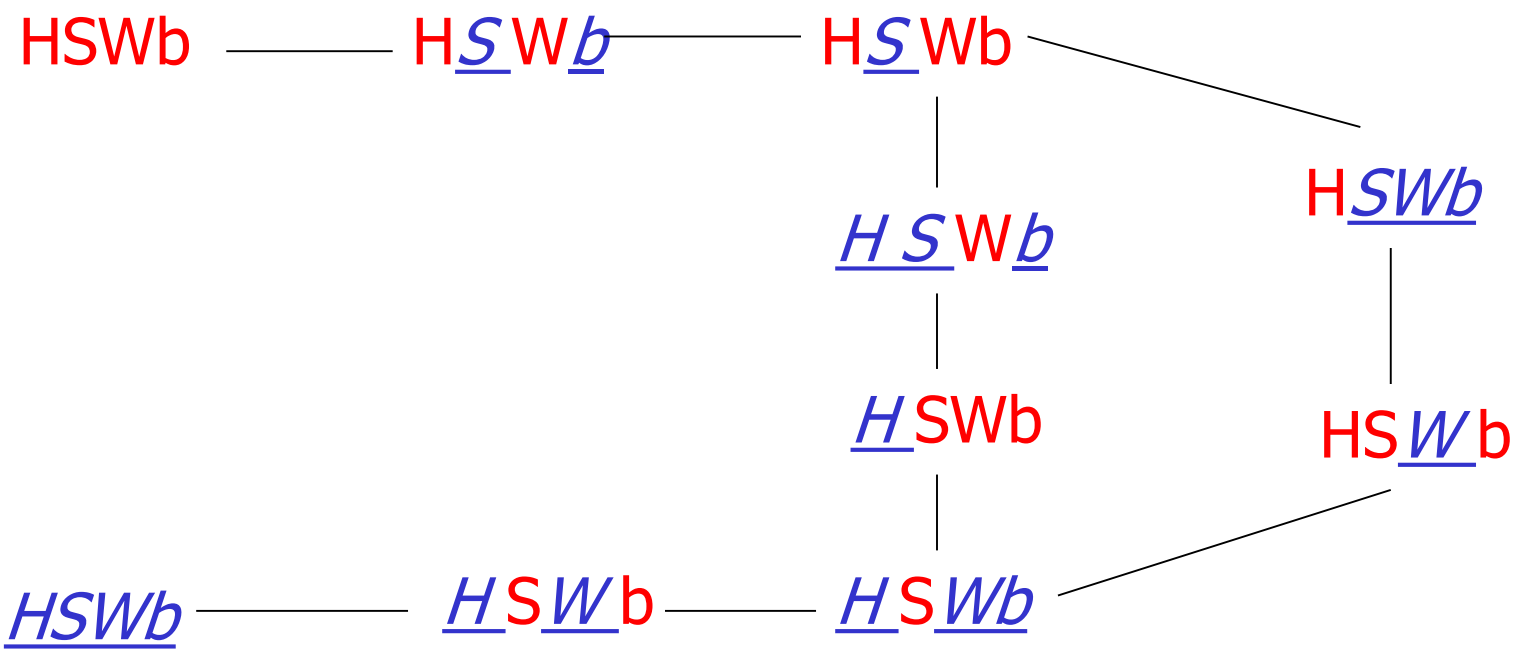

Example 1: Tax Calculation

- Write an algorithm for calculation of tax for a yearly salary. The tax is zero when the salary is £3000 or less. It is 10% for the next salary band from £3001 to £8000. It is 20% for the band from £8001 to £20000, and it is 40% for any part of the salary over £20000.

Example 2: Arrays

- Design an algorithm that tests two one dimensional arrays of the same length to see if the two arrays contain the same entries in the same order.

Example 3: Permutations

- Design an algorithm that lists all possible rearrangements of the symbols in a string of three distinct characters.

Example 4: Sequence of Numbers

Design an algorithm that when given an arrangement of the digits 0,1,2,3,4,5,6,7,8,9 rearranges the digits so that the new arrangement represents the next larger value that can be represented by these digits (or reports that no such arrangement exists if no rearrangement produces a larger value). Thus 5647382901 would produce 5647382910.